VECTORWORKS EDUCATIONAL VERSION

ALL DIMENSIONS FROM CENTER

ARROWS INDICATE POWER RUNS

PLEASE NOTE ALL DIMMED CIRCUITS ON LAYOUT AND PAPERWORK`

FIXTURE COUNTS
4x 26° LED S4 12x 26° S4

Drop Soco RR to SR Apron Ladder
Drop 1 Circuit (117) from SL Quad Box, 20'
Drop 1 Circuit of L6-20 208V from Soco LA, 25'
Drop DMX RA Female line and Male return line (50')

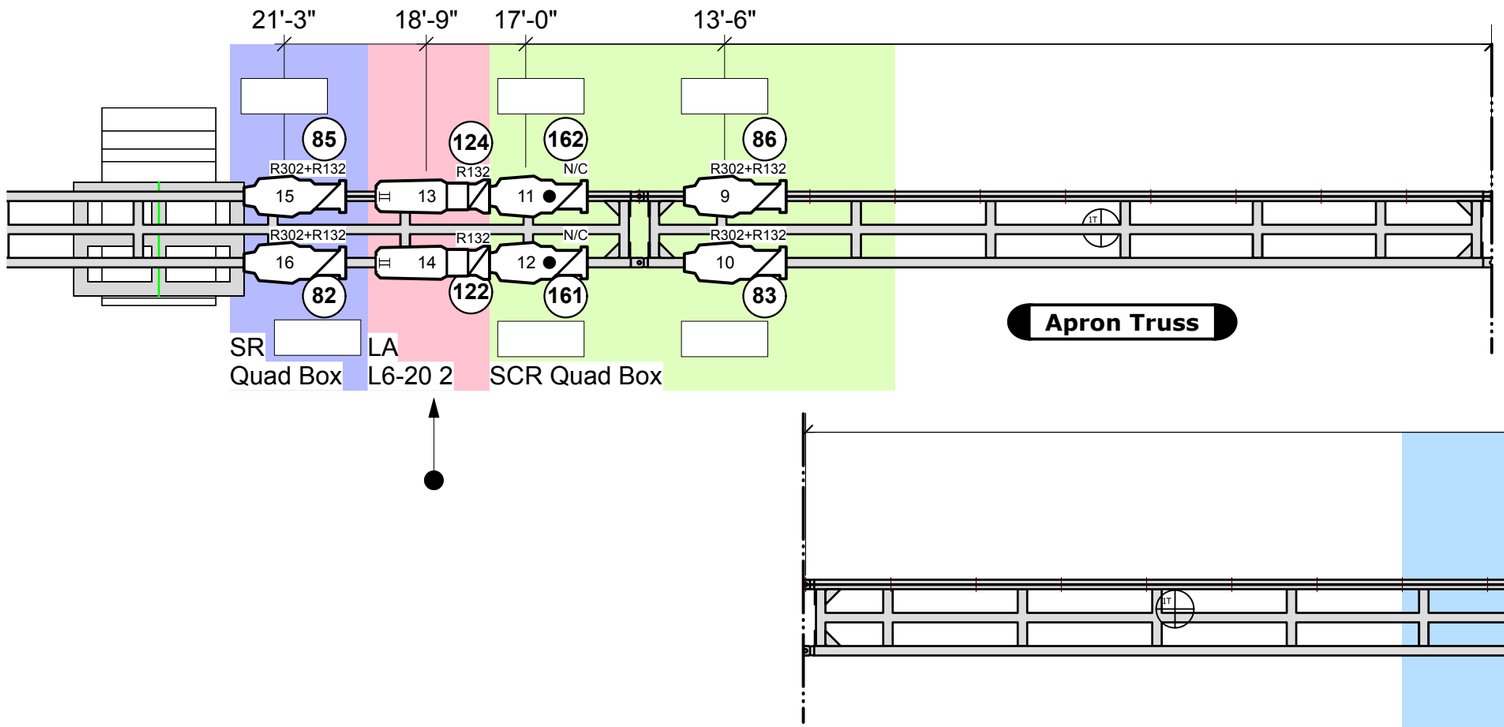

Drop Soco LB to SL Apron Ladder
Drop 1 Circuit (130) from SL Quad Box, 20'
Drop 1 Circuit of L6-20 208V from Soco LA, 25'

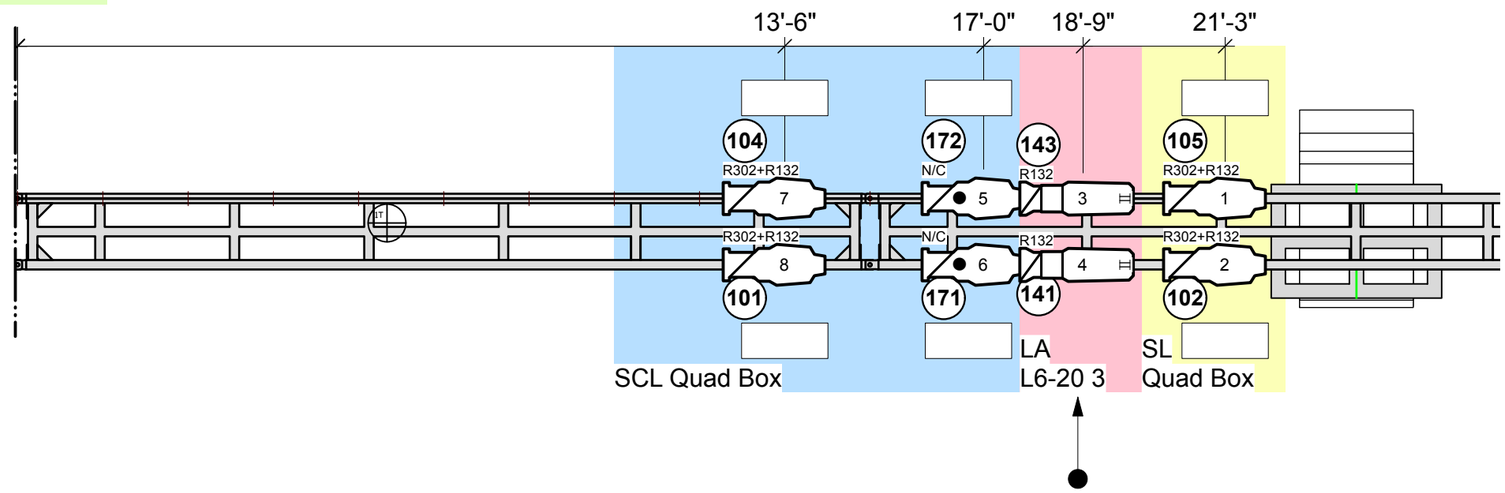

1 Soco of Constant 208V LA: from SL, lands Center	POWER
4 Quad-Boxes of Dimmed 120V Distributed on Truss (117-131)	DIM
1 Line of DMX RA: from SR (U. 11), Daisy Chain all	DATA

S4 26deg

ETC Source4 LED2LS 26deg

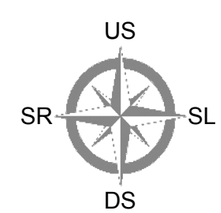

Position			
Apron Truss			
Lineset: Apron	Date: 8/24/25	Production: Grand Night for Singing	FOR: Hang
SCALE 1:32	Trim	SHEET Sht-1 OF 17	

VECTORWORKS EDUCATIONAL VERSION

VECTORWORKS EDUCATIONAL VERSION

ALL DIMENSIONS FROM CENTER

ARROWS INDICATE POWER RUNS

PLEASE NOTE ALL DIMMED CIRCUITS ON LAYOUT AND PAPERWORK`

FIXTURE COUNTS
2x 19° S4
4x 26° S4
2x 26° LED S4

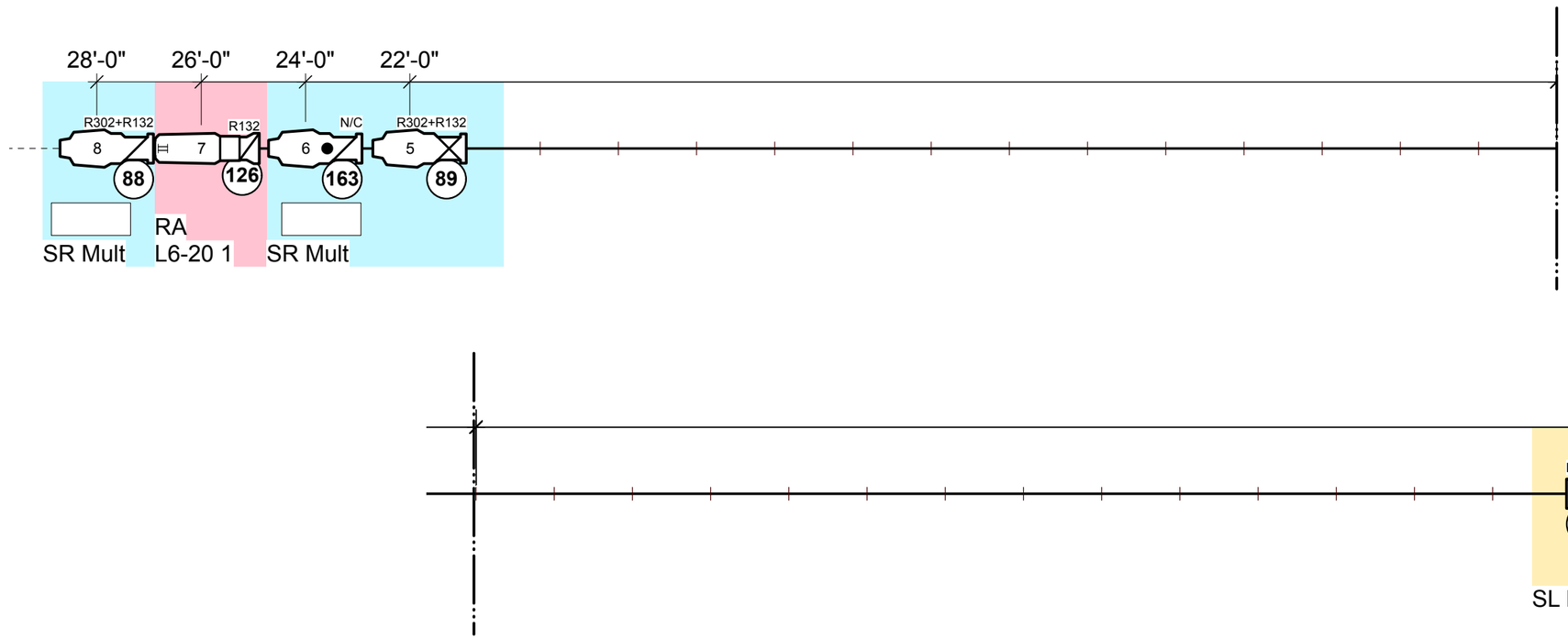

1 Soco of Constant 208V RA: from SR, lands Quarter SR	POWER
4 House Breakouts of Dimmed 120V Distributed on Batten (135-158)	DIM
1 Line of DMX RB: from SR (U. 12), Daisy Chain all	DATA

S4 19deg

S4 26deg

ETC Source4 LED2LS 26deg

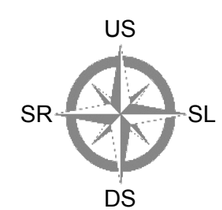

Position			
1st Electric			
Lineset: A	Date: 8/24/25	Production: Grand Night for Singing	FOR: Hang
SCALE 1:32	Trim 28'3"	SHEET Sht-2 OF 17	

VECTORWORKS EDUCATIONAL VERSION

VECTORWORKS EDUCATIONAL VERSION

ALL DIMENSIONS FROM CENTER

ARROWS INDICATE POWER RUNS

PLEASE NOTE ALL DIMMED CIRCUITS ON LAYOUT AND PAPERWORK`

FIXTURE COUNTS
4x Solaframe 2K
5x Rayzor 760
4x 26° S4
2x 36° S4
6x MFL S4 Par

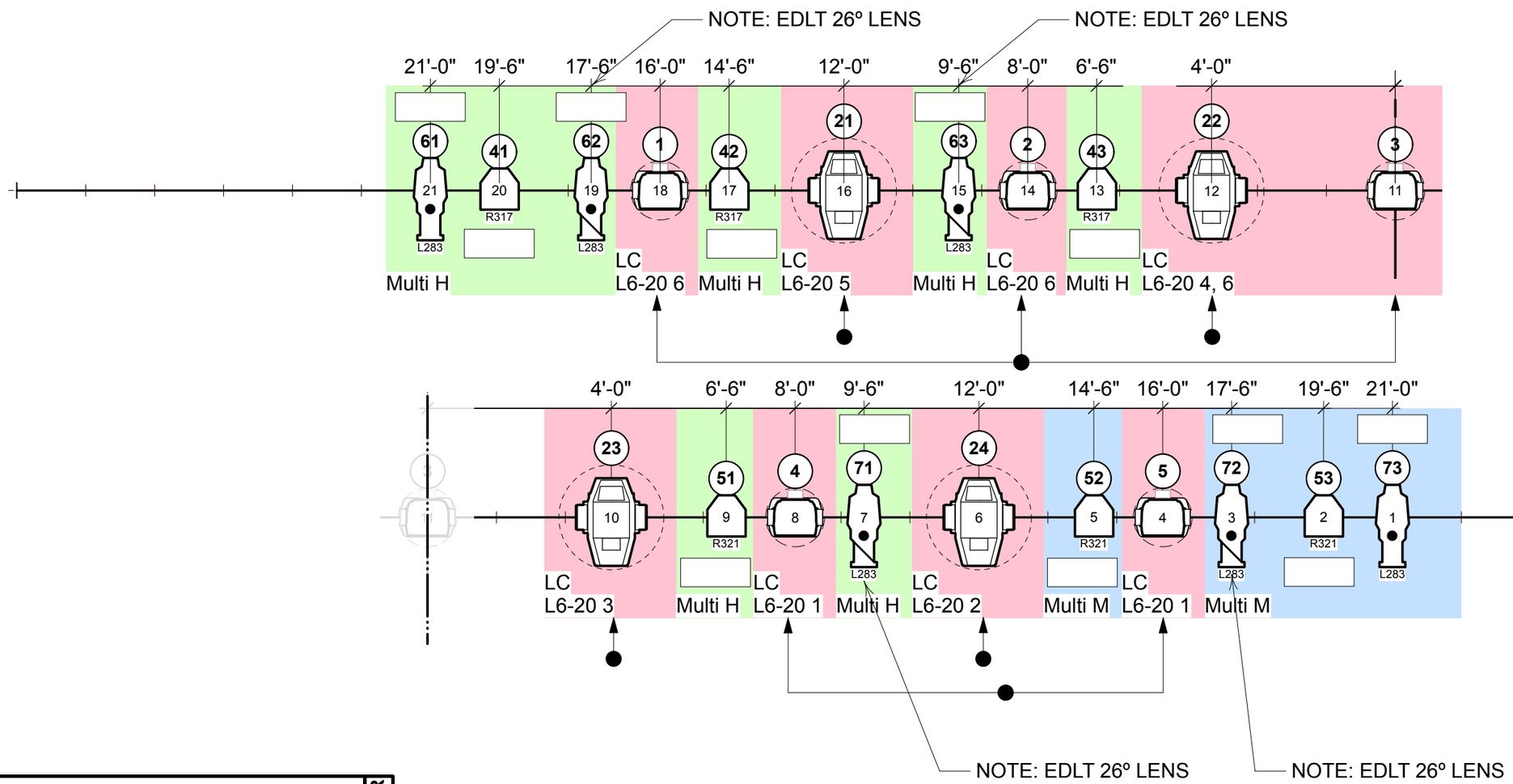

1 Soco of Constant 208V LC: from SL, lands Quarter SL	POWER
2 Mults of Dimmed 120V Multi M: 4ch. (66, 68, 70, 72) from SL Multi H: 8ch. (odds 93-103, 251, 253) from SR	DIM
1 Line of DMX LB: from SL (U. 13), Daisy Chain all	DATA

S4 26deg

S4 36deg

ETC S4 PAR MFL

Elation Proteus Rayzor 760

High End SolaFrame 2000

US
SR SL
DS

Position: 1A Electric			
Lineset: 6	Date: 8/24/25	Production: Grand Night for Singing	FOR: Hang
SCALE 1:32	Trim 32'	SHEET Sht-3 OF 17	

VECTORWORKS EDUCATIONAL VERSION

VECTORWORKS EDUCATIONAL VERSION

ALL DIMENSIONS FROM CENTER

ARROWS INDICATE POWER RUNS

PLEASE NOTE ALL DIMMED CIRCUITS ON LAYOUT AND PAPERWORK`

FIXTURE COUNTS
2x 26° LED S4
2x 19° S4
4x 26° S4
1x VNSP S4 Par

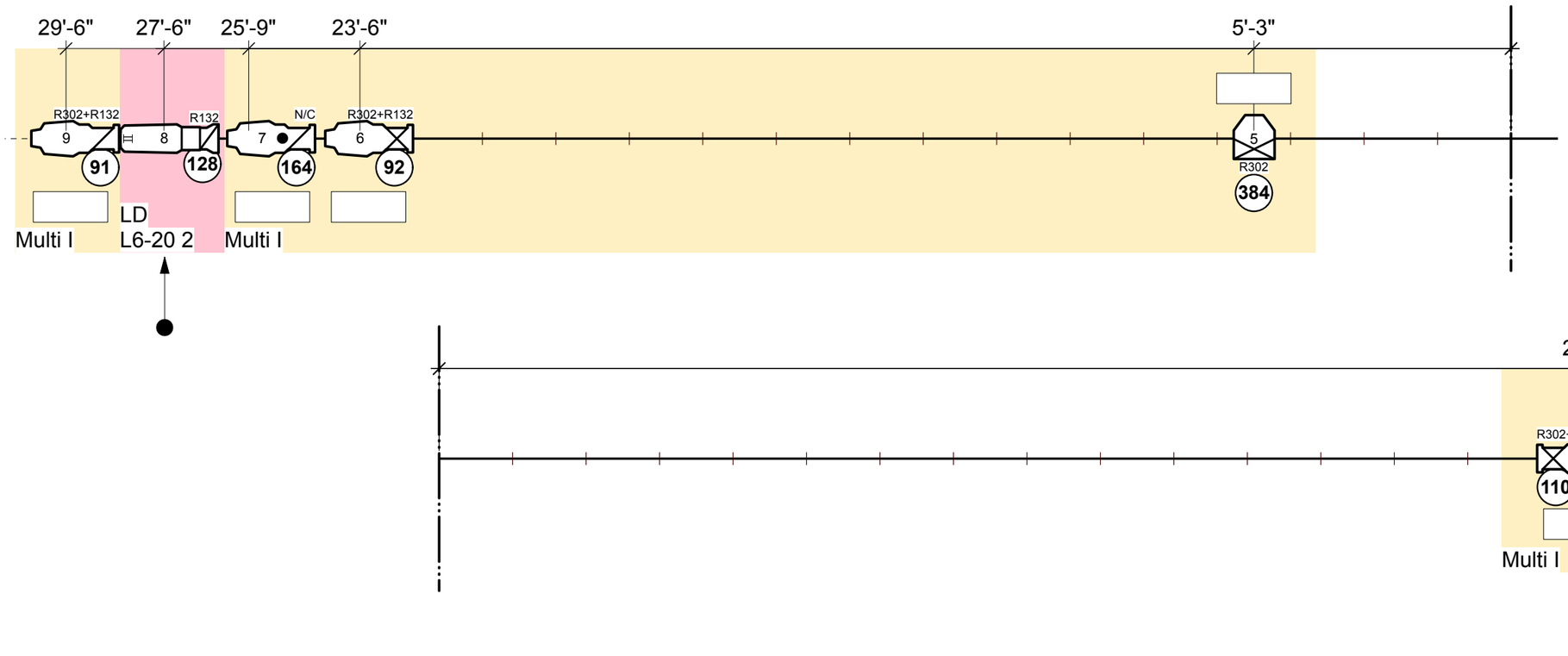

1 Soco of Constant 208V LD: from SL, lands Quarter SL	POWER
1 Mult of Dimmed 120V Multi I: 8ch. (odds 255-265, 61, 63) from SR	DIM
1 Line of DMX LC: from SL (U. 14), Daisy Chain all	DATA

S4 19deg

S4 26deg

ETC Source4 LED2LS 26deg

ETC S4 PAR VNSP

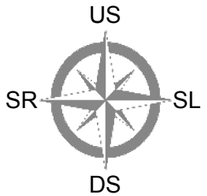

Position			
1B Electric			
Lineset: 11	Date: 8/24/25	Production: Grand Night for Singing	FOR: Hang
SCALE 1:32	Trim 29'	SHEET Sht-4 OF 17	

VECTORWORKS EDUCATIONAL VERSION

VECTORWORKS EDUCATIONAL VERSION

ALL DIMENSIONS FROM CENTER

ARROWS INDICATE POWER RUNS

PLEASE NOTE ALL DIMMED CIRCUITS ON LAYOUT AND PAPERWORK`

FIXTURE COUNTS
4x Solaframe 2K
5x Rayzor 760
2x 19° S4
4x 26° S4
2x 36° S4
6x MFL S4 Par

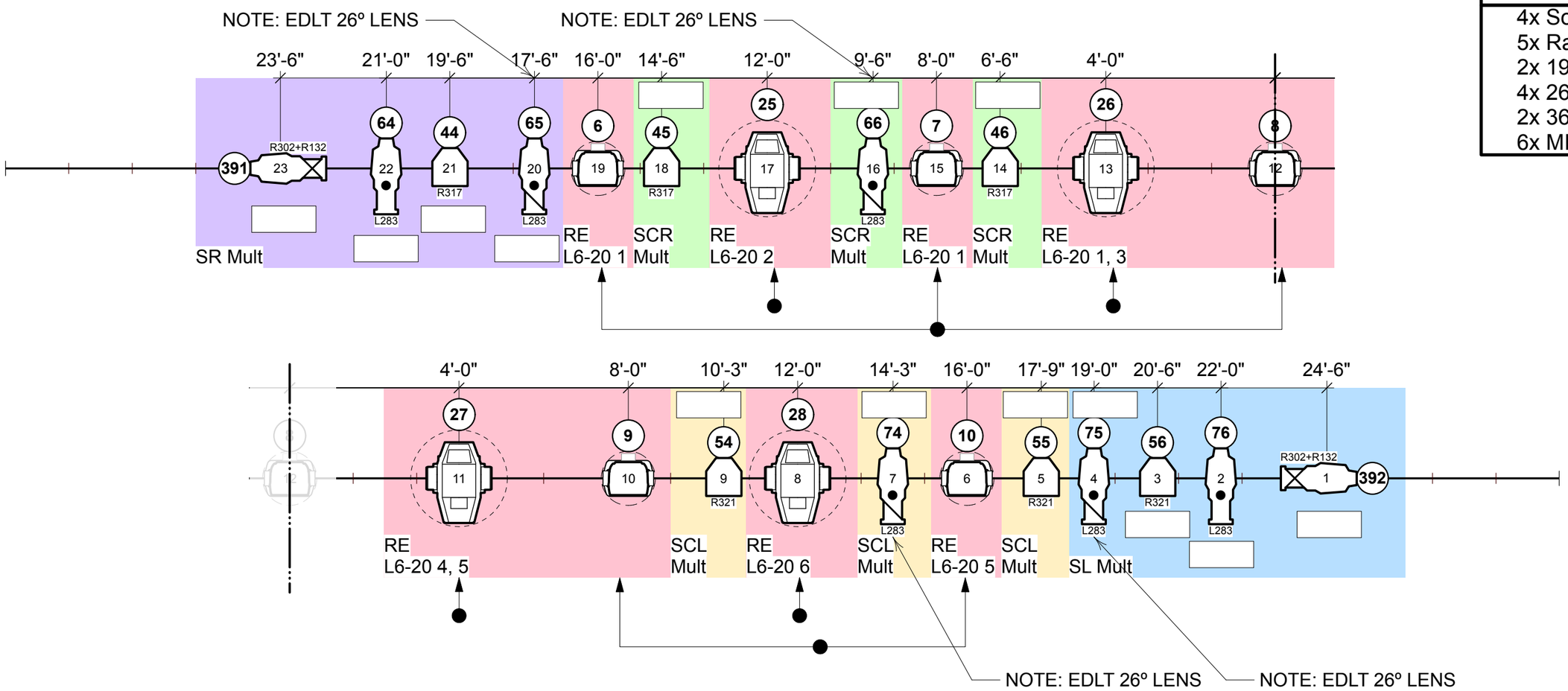

1 Soco of Constant 208V RE: from SR, lands Quarter SR	POWER
4 House Breakouts of Dimmed 120V Distributed on Batten (159-183)	DIM
1 Line of DMX RC: from SR (U. 15), Daisy Chain all	DATA

S4 19deg

S4 26deg

S4 36deg

ETC S4 PAR MFL

Elation Proteus Rayzor 760

High End SolaFrame 2000

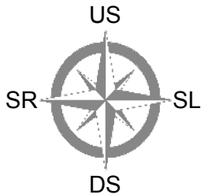

Position: 2nd Electric			
Lineset: B	Date: 8/24/25	Production: Grand Night for Singing	FOR: Hang
SCALE 1:32	Trim 31'3"	SHEET Sht-5 OF 17	

VECTORWORKS EDUCATIONAL VERSION

VECTORWORKS EDUCATIONAL VERSION

ALL DIMENSIONS FROM CENTER

ARROWS INDICATE POWER RUNS

PLEASE NOTE ALL DIMMED CIRCUITS ON LAYOUT AND PAPERWORK`

FIXTURE COUNTS
2x 26° LED S4
2x 19° S4
4x 26° S4`

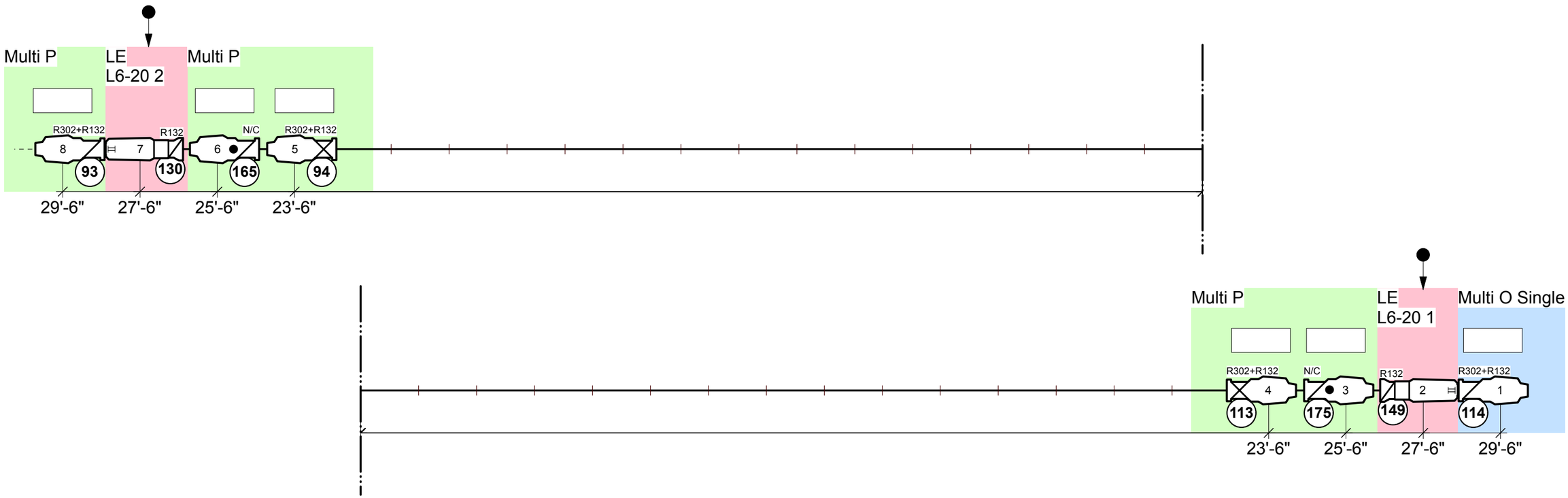

1 Soco of Constant 208V LE: from SL, lands Quarter SL	POWER
1 Mult of Dimmed 120V Multi P: 5ch. (evens 240-248) from SL 1 Single: Multi O on SL Truss	DIM
1 Line of DMX LD: from SL (U. 16), Daisy Chain all	DATA

S4 19deg

S4 26deg

ETC Source4 LED2LS 26deg

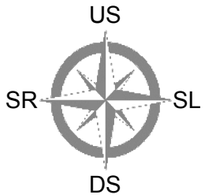

Position			
2A Electric			
Lineset: 17	Date: 8/24/25	Production: Grand Night for Singing	FOR: Hang
SCALE 1:32	Trim 31'	SHEET Sht-6 OF 17	

VECTORWORKS EDUCATIONAL VERSION

VECTORWORKS EDUCATIONAL VERSION

ALL DIMENSIONS FROM CENTER

ARROWS INDICATE POWER RUNS

PLEASE NOTE ALL DIMMED CIRCUITS ON LAYOUT AND PAPERWORK`

FIXTURE COUNTS
4x 26° S4
4x MFL S4 Par
3x VNSP S4 Par

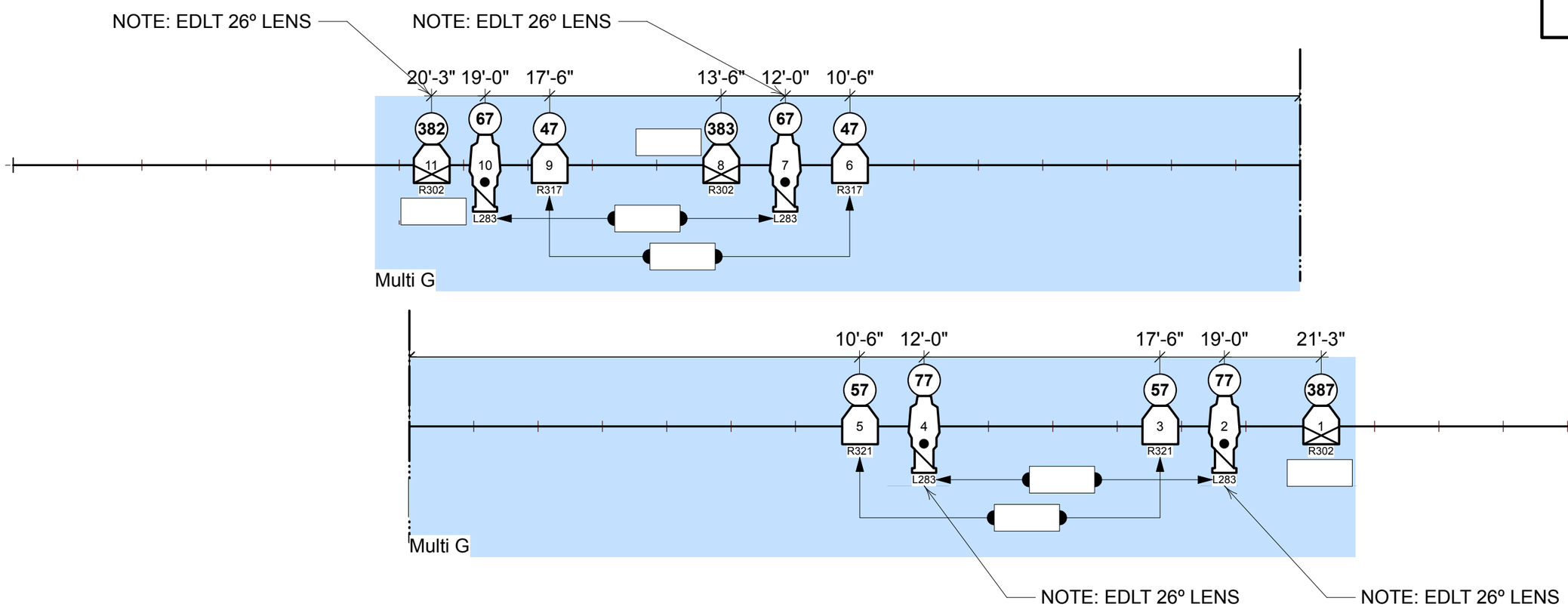

N/A	POWER
1 Mult of Dimmed 120V Multi G: 8ch. (232-239) from SR	DIM
N/A	DATA

S4 26deg

ETC S4 PAR VNSP

ETC S4 PAR MFL

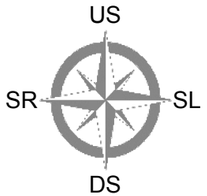

Position			
2B Electric			
Lineset 19	Date 8/24/25	Production Grand Night for Singing	FOR: Hang
SCALE 1:32	Trim 31'3"	SHEET Sht-7 OF 17	

VECTORWORKS EDUCATIONAL VERSION

VECTORWORKS EDUCATIONAL VERSION

ALL DIMENSIONS FROM CENTER

ARROWS INDICATE POWER RUNS

PLEASE NOTE ALL DIMMED CIRCUITS ON LAYOUT AND PAPERWORK`

FIXTURE COUNTS
2x 26° LED S4
2x 19° S4
4x 26° S4
2x VNSP S4 Par

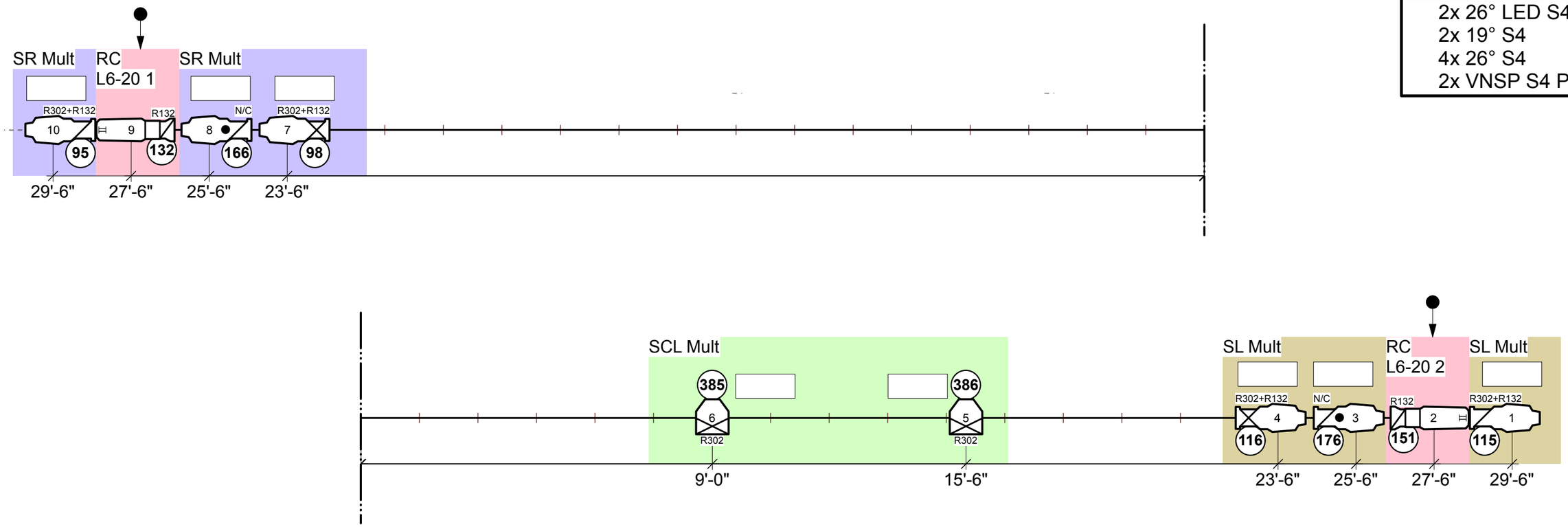

1 Soco of Constant 208V RJ: from SR, lands Center	POWER
4 House Breakouts of Dimmed 120V Distributed on Batten (184-208)	DIM
1 Line of DMX RE: from SR (U. 17), Daisy Chain all	DATA

- S4 19deg
- S4 26deg
- ETC Source4 LED2LS 26deg
- ETC S4 PAR VNSP

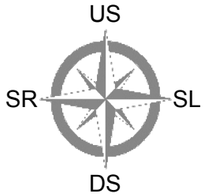

Position			
3rd Electric			
Lineset: C	Date: 8/24/25	Production: Grand Night for Singing	FOR: Hang
SCALE 1:32	Trim 31'9"	SHEET Sht-8 OF 17	

VECTORWORKS EDUCATIONAL VERSION

VECTORWORKS EDUCATIONAL VERSION

ALL DIMENSIONS FROM CENTER

ARROWS INDICATE POWER RUNS

PLEASE NOTE ALL DIMMED CIRCUITS ON LAYOUT AND PAPERWORK`

FIXTURE COUNTS
4x Solaframe 2K
2x 26° LED S4
4x 26° S4

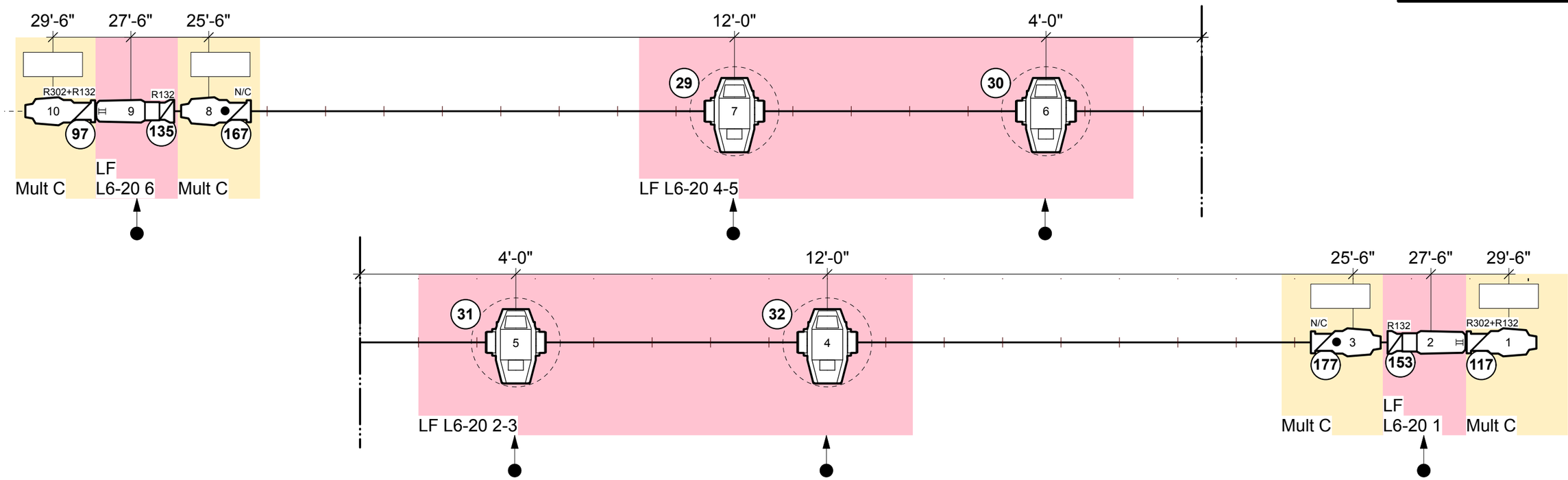

1 Soco of Constant 208V LF: from SL, lands Center	POWER
1 Mult of Dimmed 120V Multi C: 4ch. (81, 83, 85, 87) from SR	DIM
1 Line of DMX LE: from SL (U. 18), Daisy Chain all	DATA

S4 26deg

ETC Source4 LED2LS 26deg

High End SolaFrame 2000

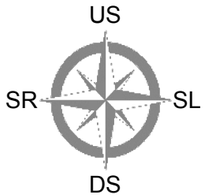

Position: 3A Electric			
Lineset: 27	Date: 8/24/25	Production: Grand Night for Singing	FOR: Hang
SCALE 1:32	Trim 32'3"	SHEET Sht-9 OF 17	

VECTORWORKS EDUCATIONAL VERSION

VECTORWORKS EDUCATIONAL VERSION

ALL DIMENSIONS FROM CENTER

ARROWS INDICATE POWER RUNS

PLEASE NOTE ALL DIMMED CIRCUITS ON LAYOUT AND PAPERWORK`

FIXTURE COUNTS
5x Rayzor 760
4x 26° S4
1x VNSP S4 Par
4x MFL S4 Par

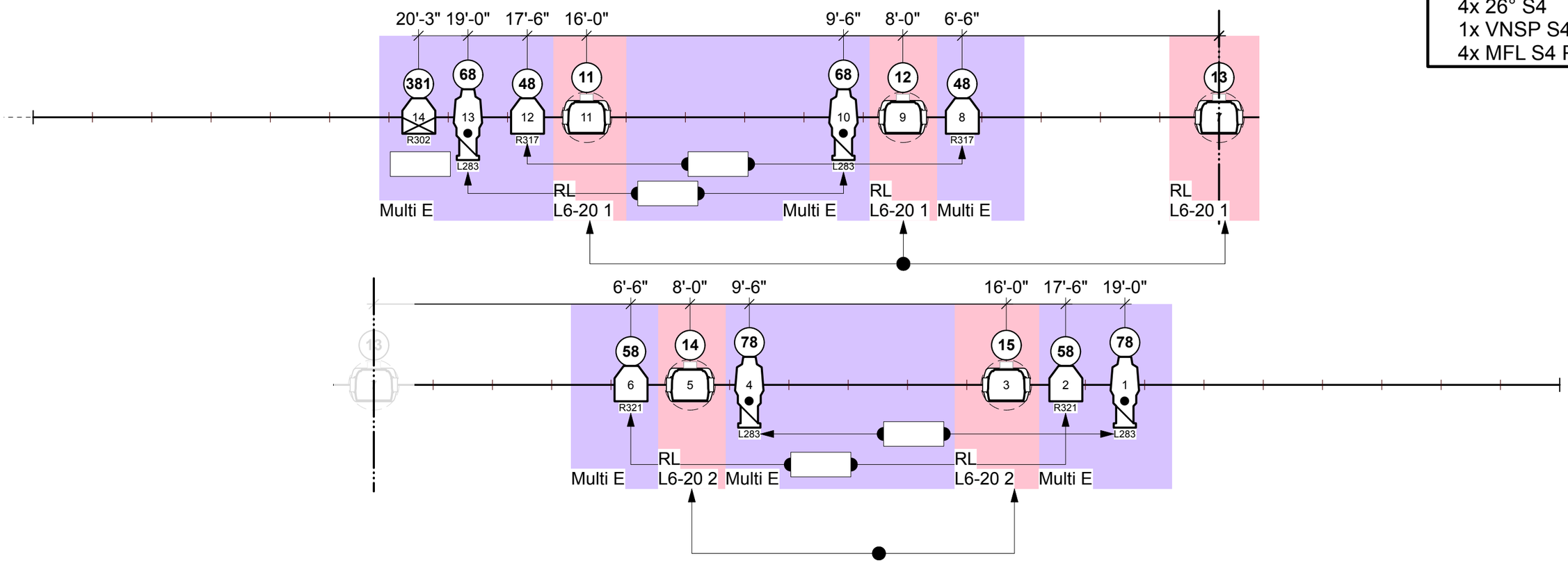

2 L6-20 Singles of Constant 208V from Soco RL on SR Truss: Lands Quarter SR	POWER
1 Mult of Dimmed 120V Multi E: 5ch. (65, 67, 241, 243, 245) from SR	DIM
1 Line of DMX LF: from SL (U. 19), Daisy Chain all	DATA

Elation Proteus Rayzor 760

S4 26deg

ETC S4 PAR VNSP

ETC S4 PAR MFL

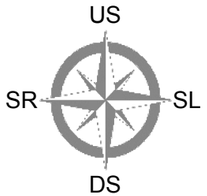

Position			
3B Electric			
Lineset: 28	Date: 8/24/25	Production: Grand Night for Singing	FOR: Hang
SCALE 1:32	Trim 31'9"	SHEET Sht-10 OF 17	

VECTORWORKS EDUCATIONAL VERSION

VECTORWORKS EDUCATIONAL VERSION

ALL DIMENSIONS FROM CENTER

ARROWS INDICATE POWER RUNS

PLEASE NOTE ALL DIMMED CIRCUITS ON LAYOUT AND PAPERWORK`

FIXTURE COUNTS
5x Rayzor 760 6x 36° S4 6x WFL S4 Par

NOTE: FIXTURES CHANNELED TOGETHER WILL BE TWOFERED IN THE CONSOLE PATCH

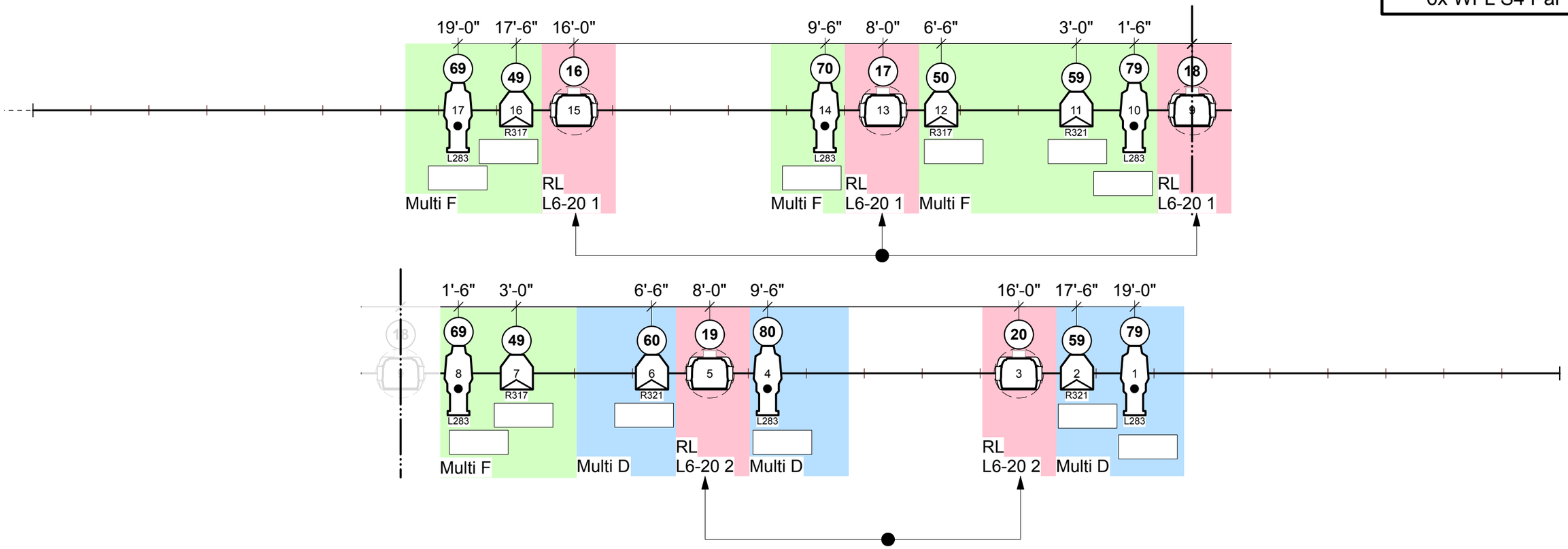

2 L6-20 Singles of Constant 208V from Soco RL on SR Truss: Lands Quarter SR	POWER
2 Mults of Dimmed 120V Multi D: 5ch. (69, 71, 73, 75, 79) from SR Multi F: 8ch. (224-231) from SR	DIM
1 Line of DMX LG: from SL (U. 20), Daisy Chain all	DATA

S4 36deg

S4 PAR WFL

Elation Proteus Rayzor 760

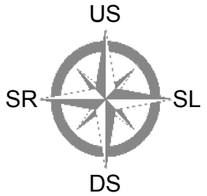

Position			
3C Electric			
Lineset: 34	Date: 8/24/25	Production: Grand Night for Singing	FOR: Hang
SCALE 1:32	Trim 276"	SHEET Sht-11 OF 17	

VECTORWORKS EDUCATIONAL VERSION

VECTORWORKS EDUCATIONAL VERSION

ALL DIMENSIONS FROM DECK

ARROWS INDICATE POWER RUNS

PLEASE NOTE ALL DIMMED CIRCUITS ON LAYOUT AND PAPERWORK`

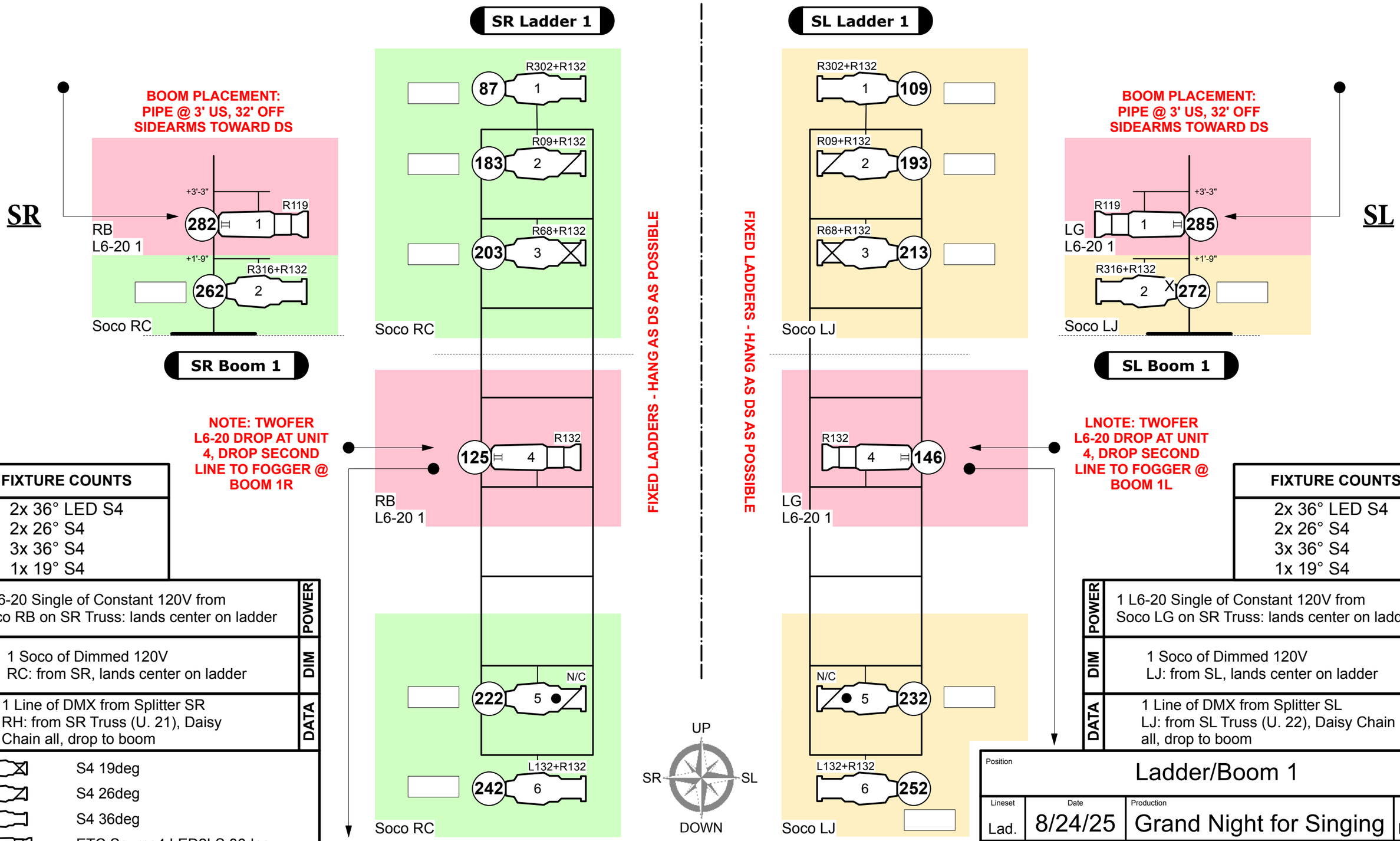

FIXTURE COUNTS
2x 36° LED S4
2x 26° S4
3x 36° S4
1x 19° S4

POWER	1 L6-20 Single of Constant 120V from Soco RB on SR Truss: lands center on ladder
DIM	1 Soco of Dimmed 120V RC: from SR, lands center on ladder
DATA	1 Line of DMX from Splitter SR RH: from SR Truss (U. 21), Daisy Chain all, drop to boom

- S4 19deg
- S4 26deg
- S4 36deg
- ETC Source4 LED2LS 36deg

FIXTURE COUNTS
2x 36° LED S4
2x 26° S4
3x 36° S4
1x 19° S4

POWER	1 L6-20 Single of Constant 120V from Soco LG on SR Truss: lands center on ladder
DIM	1 Soco of Dimmed 120V LJ: from SL, lands center on ladder
DATA	1 Line of DMX from Splitter SL LJ: from SL Truss (U. 22), Daisy Chain all, drop to boom

Position			
Ladder/Boom 1			
Lineset: Lad.	Date: 8/24/25	Production: Grand Night for Singing	FOR: Hang
SCALE 1:24	Trim Fixed	SHEET Sht-12 OF 17	

VECTORWORKS EDUCATIONAL VERSION

VECTORWORKS EDUCATIONAL VERSION

ALL DIMENSIONS FROM DECK UNLESS NOTED

ARROWS INDICATE POWER RUNS

PLEASE NOTE ALL DIMMED CIRCUITS ON LAYOUT AND PAPERWORK`

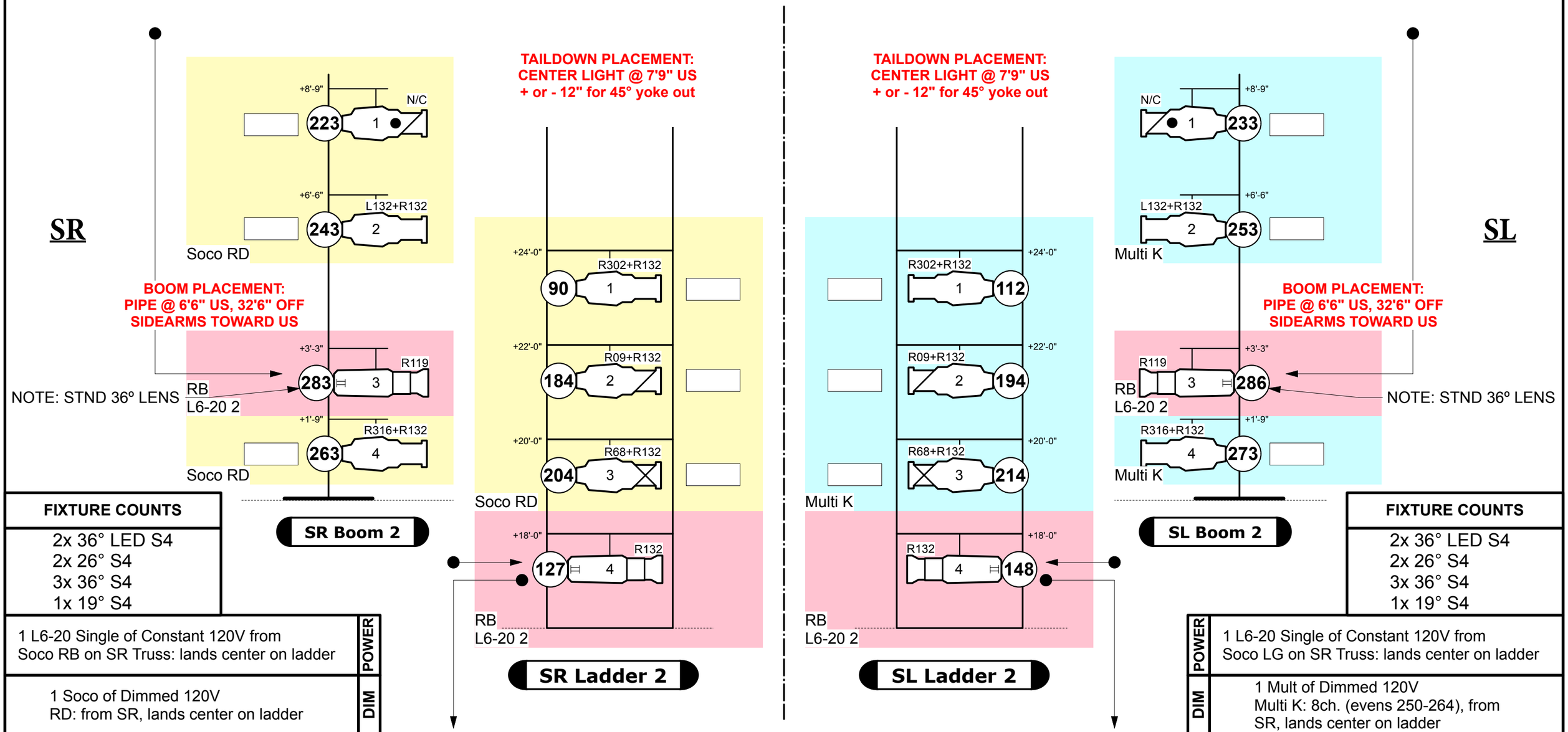

FIXTURE COUNTS
2x 36° LED S4
2x 26° S4
3x 36° S4
1x 19° S4

POWER	1 L6-20 Single of Constant 120V from Soco RB on SR Truss: lands center on ladder
DIM	1 Soco of Dimmed 120V RD: from SR, lands center on ladder
DATA	1 Line of DMX from Splitter SR RH: from SR Truss (U. 21), Daisy Chain all, drop to boom

- S4 19deg
- S4 26deg
- S4 36deg
- ETC Source4 LED2LS 36deg

UP
SR
SL
DOWN

FIXTURE COUNTS
2x 36° LED S4
2x 26° S4
3x 36° S4
1x 19° S4

POWER	1 L6-20 Single of Constant 120V from Soco LG on SR Truss: lands center on ladder
DIM	1 Mult of Dimmed 120V Multi K: 8ch. (evens 250-264), from SR, lands center on ladder
DATA	1 Line of DMX from Splitter SL LJ: from SL Truss (U. 22), Daisy Chain all, drop to boom

Position			
Ladder/Boom 2			
Lineset: Lad.	Date: 8/24/25	Production: Grand Night for Singing	FOR: Hang
SCALE 1:24	Trim: Bottom rung @ 16'	SHEET Sht-13 OF 17	

VECTORWORKS EDUCATIONAL VERSION

VECTORWORKS EDUCATIONAL VERSION

ALL DIMENSIONS FROM DECK UNLESS NOTED

ARROWS INDICATE POWER RUNS

PLEASE NOTE ALL DIMMED CIRCUITS ON LAYOUT AND PAPERWORK`

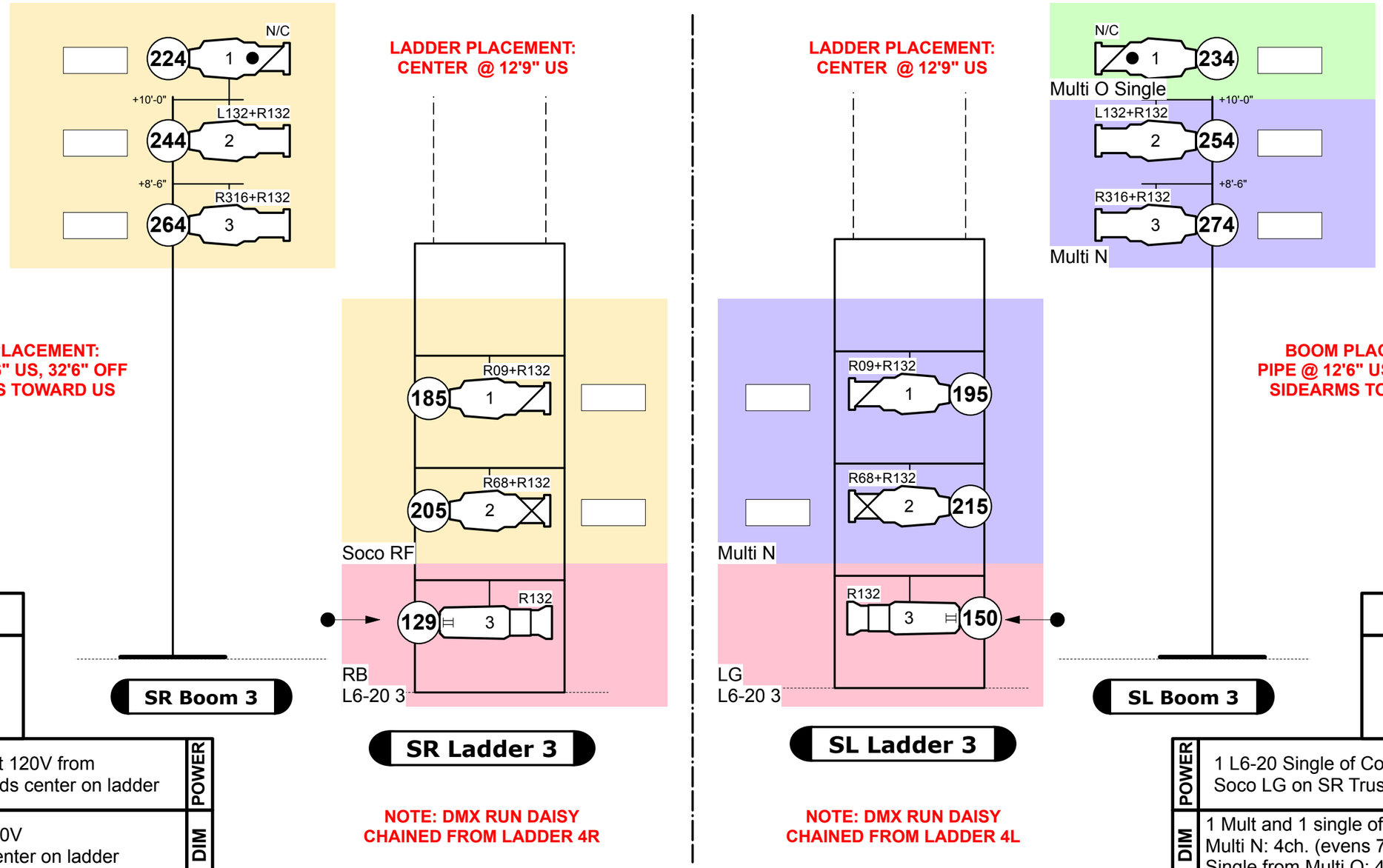

NOTE: DMX RUN DAISY CHAINED FROM LADDER 4R

NOTE: DMX RUN DAISY CHAINED FROM LADDER 4L

FIXTURE COUNTS
1x 36° LED S4 2x 26° S4 2x 36° S4 1x 19° S4

POWER	1 L6-20 Single of Constant 120V from Soco RB on SR Truss: lands center on ladder
DIM	1 Soco of Dimmed 120V RF: from SR, lands center on ladder
DATA	1 Line of DMX from Splitter SR RH: from SR Truss (U. 21), Daisy Chained from Ladder 4R

- S4 19deg
- S4 26deg
- S4 36deg
- ETC Source4 LED2LS 36deg

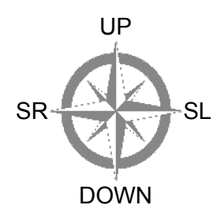

FIXTURE COUNTS
1x 36° LED S4 2x 26° S4 2x 36° S4 1x 19° S4

POWER	1 L6-20 Single of Constant 120V from Soco LG on SR Truss: lands center on ladder
DIM	1 Mult and 1 single of Dimmed 120V Multi N: 4ch. (evens 72-78), from SL Single from Multi O: 4ch. (evens 82-88), from SL
DATA	1 Line of DMX from Splitter SL LJ: from SL Truss (U. 22), Daisy Chained from Ladder 4L

Position: Ladder/Boom 3			
Lineset: Lad.	Date: 8/24/25	Production: Grand Night for Singing	FOR: Hang
SCALE 1:24	Trim: Bottom rung @ 16'	SHEET Sht-14 OF 17	

VECTORWORKS EDUCATIONAL VERSION

VECTORWORKS EDUCATIONAL VERSION

ALL DIMENSIONS FROM DECK UNLESS NOTED

ARROWS INDICATE POWER RUNS

PLEASE NOTE ALL DIMMED CIRCUITS ON LAYOUT AND PAPERWORK`

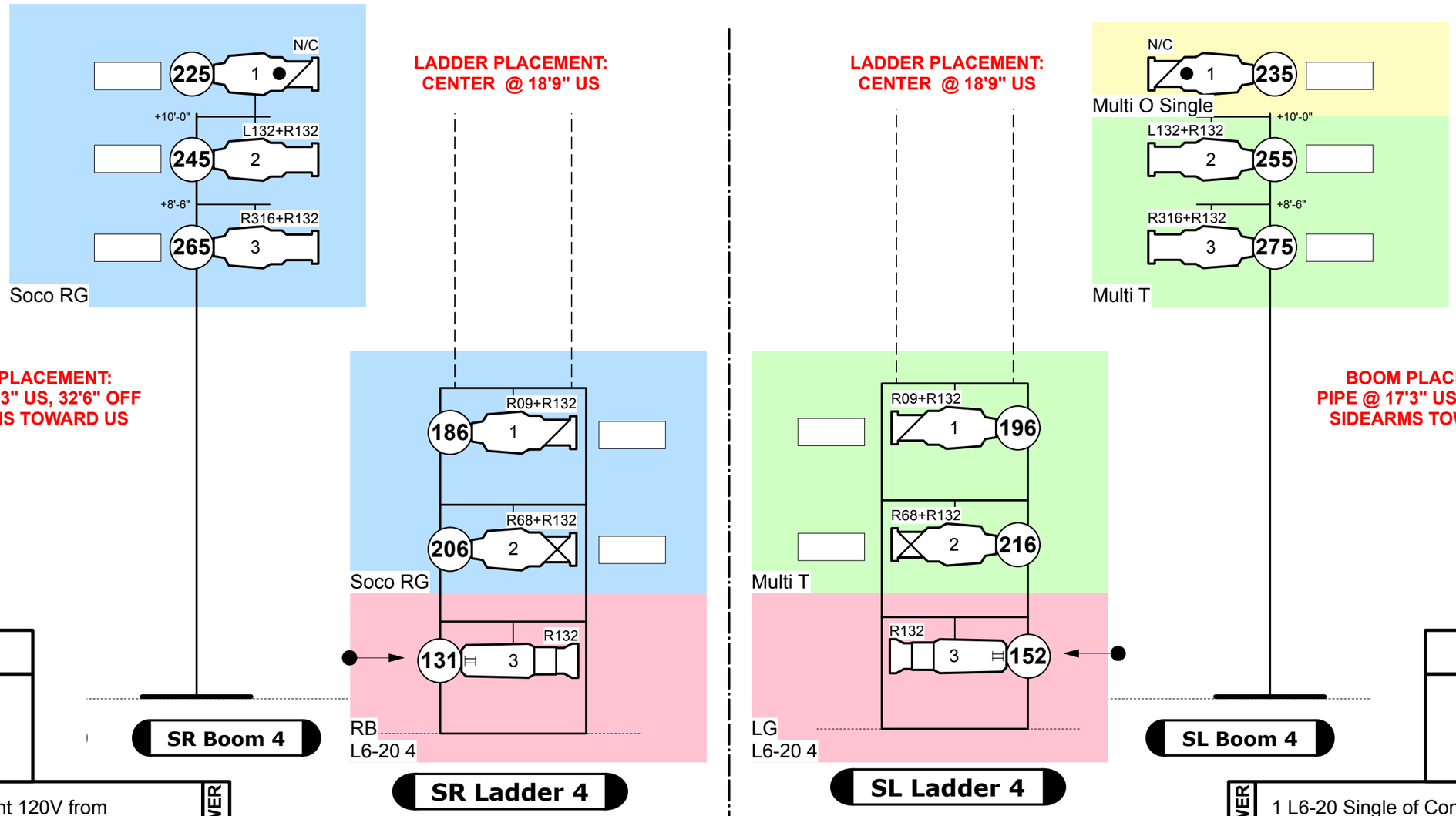

FIXTURE COUNTS
1x 36° LED S4 2x 26° S4 2x 36° S4 1x 19° S4

1 L6-20 Single of Constant 120V from Soco RB on SR Truss: lands center on ladder	POWER
1 Soco of Dimmed 120V RG: from SR, lands center on ladder	DIM
1 Line of DMX from Splitter SR RH: from SR Truss (U. 21), Daisy Chain all	DATA

S4 19deg

S4 26deg

S4 36deg

ETC Source4 LED2LS 36deg

NOTE: RUN DMX FEMALE RETURN LINE BACK TO TRUSS FOR DROP TO LADDER 3R

NOTE: RUN DMX FEMALE RETURN LINE BACK TO TRUSS FOR DROP TO LADDER 3L

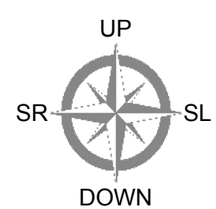

FIXTURE COUNTS
1x 36° LED S4 2x 26° S4 2x 36° S4 1x 19° S4

1 L6-20 Single of Constant 120V from Soco LG on SR Truss: lands center on ladder	POWER
1 Mult and 1 single of Dimmed 120V Multi T: 4ch. (evens 110-116), from SL Single from Multi O: 4ch. (evens 82-88), from SL	DIM
1 Line of DMX from Splitter SL LJ: from SL Truss (U. 22), Daisy Chain all	DATA

Position			
Ladder/Boom 4			
Lineset: Lad.	Date: 8/24/25	Production: Grand Night for Singing	FOR: Hang
SCALE 1:24	Trim: Bottom rung @ 16'	SHEET Sht-15 OF 17	

VECTORWORKS EDUCATIONAL VERSION

VECTORWORKS EDUCATIONAL VERSION

ALL DIMENSIONS FROM DECK UNLESS NOTED

ARROWS INDICATE POWER RUNS

PLEASE NOTE ALL DIMMED CIRCUITS ON LAYOUT AND PAPERWORK`

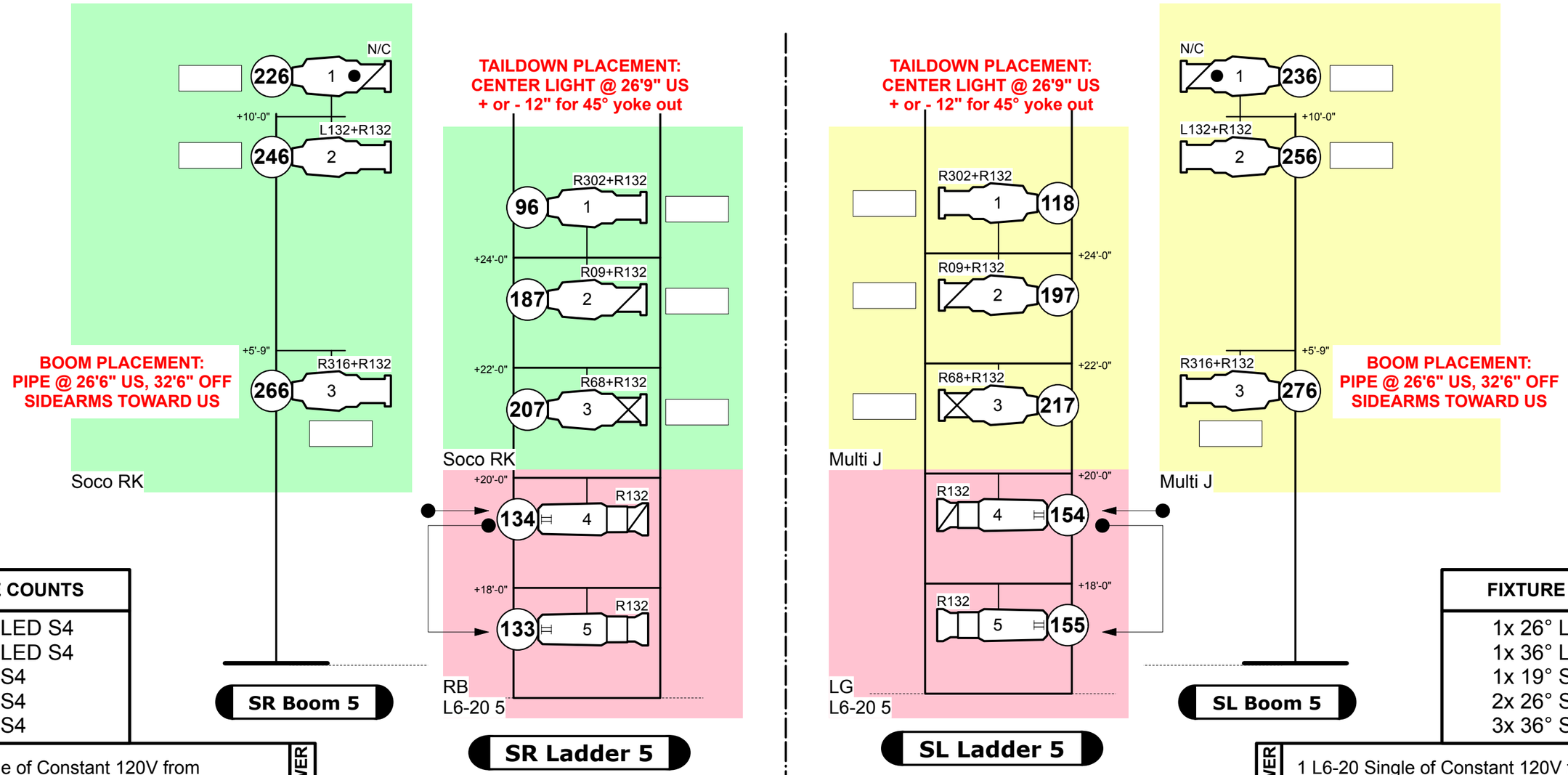

FIXTURE COUNTS
1x 26° LED S4
1x 36° LED S4
1x 19° S4
2x 26° S4
3x 36° S4

POWER	1 L6-20 Single of Constant 120V from Soco RB on SR Truss: lands center on ladder
DIM	1 Soco of Dimmed 120V RK: from SR, lands center on ladder
DATA	1 Line of DMX from Splitter SR RH: from SR Truss (U. 21), Daisy Chain all

- S4 19deg
- S4 26deg
- S4 36deg
- ETC Source4 LED2LS 36deg

UP
SR
SL
DOWN

FIXTURE COUNTS
1x 26° LED S4
1x 36° LED S4
1x 19° S4
2x 26° S4
3x 36° S4

POWER	1 L6-20 Single of Constant 120V from Soco LG on SR Truss: lands center on ladder
DIM	1 Mult of Dimmed 120V Multi J: 8ch. (evens 90-104), from SL
DATA	1 Line of DMX from Splitter SL LJ: from SL Truss (U. 22), Daisy Chain all

Position: Ladder/Boom 5			
Lineset: Lad.	Date: 8/24/25	Production: Grand Night for Singing	FOR: Hang
SCALE 1:24	Trim: Bottom rung @ 16'	SHEET Sht-16 OF 17	

VECTORWORKS EDUCATIONAL VERSION

VECTORWORKS EDUCATIONAL VERSION

ALL DIMENSIONS FROM BOTTOM OF APRON TRUSS

ARROWS INDICATE POWER RUNS

PLEASE NOTE ALL DIMMED CIRCUITS ON LAYOUT AND PAPERWORK`

NOTE: YOKE CH. 81 90º ONSTAGE

NOTE: YOKE CH. 103 90º ONSTAGE

SR

NOTE: RUN FEMALE DMX RETURN LINE BACK TO APRON TRUSS FROM UNIT 11 (50')

SL

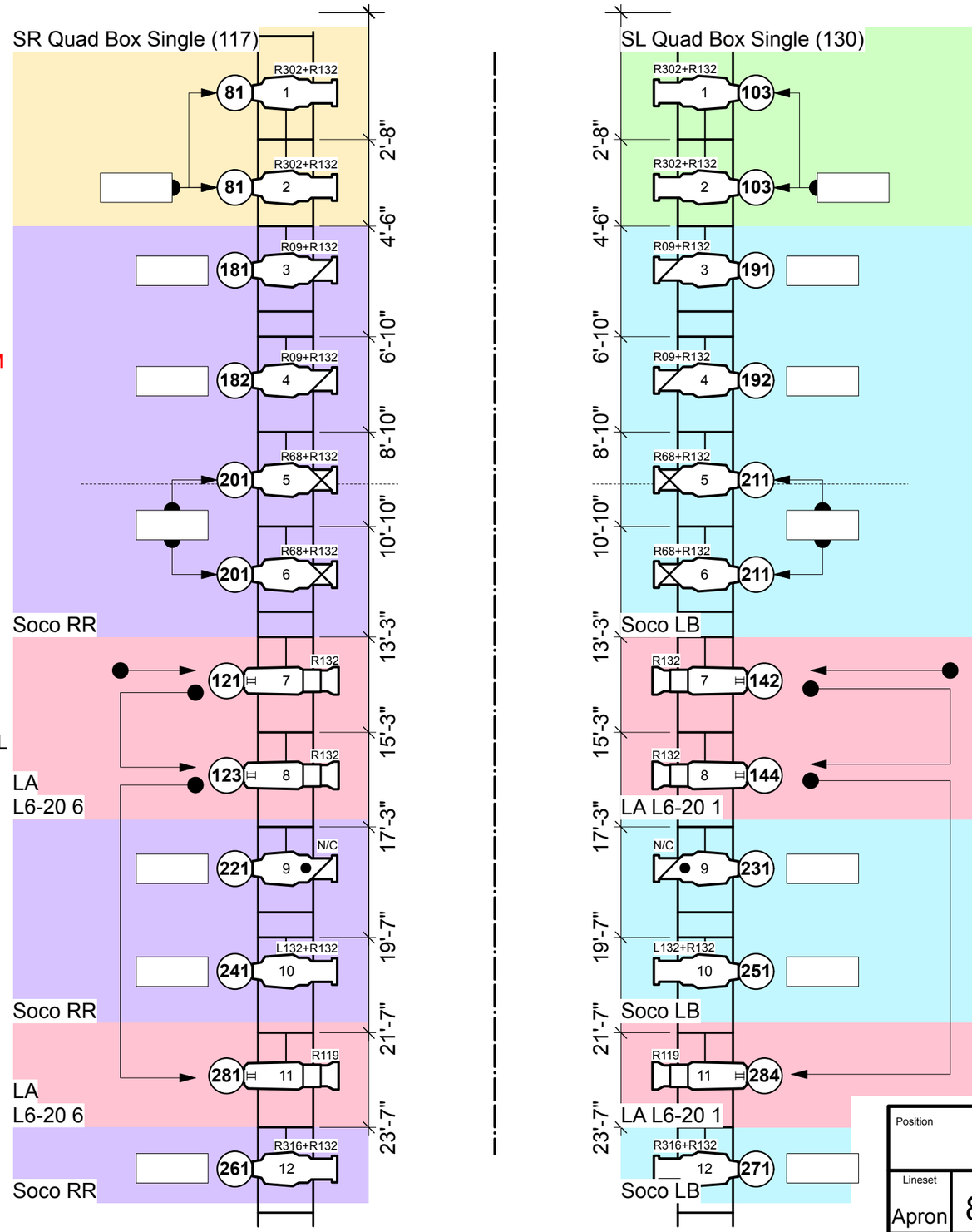

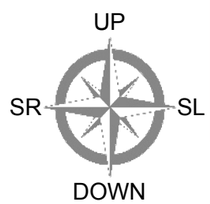

FIXTURE COUNTS

3x 36° LED S4
2x 19° S4
3x 26° S4
4x 36° S4

POWER	1 L6-20 Single of Constant 208V from Soco LA on ApronTruss: drop ~15'
DIM	1 Soco and 1 Single of Dimmed 120V Soco RR: from SR Single from Apron SR Quad Box, dim. 117
DATA	1 Line of DMX RA: from SR (U. 11), Daisy Chain all, send out of Unit 11 back to Apron Truss

S4 19deg

S4 26deg

S4 36deg

ETC Source4 LED2LS 36deg

FIXTURE COUNTS

3x 36° LED S4
2x 19° S4
3x 26° S4
4x 36° S4

POWER	1 L6-20 Single of Constant 208V from Soco LA on ApronTruss: drop ~15'
DIM	1 Soco and 1 Single of Dimmed 120V Soco LB: from SL Single from Apron SL Quad Box, dim. 130
DATA	1 Line of DMX RA: from SR (U. 11), Daisy Chain all

Position: Apron Ladders			
Lineset: Apron	Date: 8/24/25	Production: Grand Night for Singing	FOR: Hang
SCALE 1:32	Trim n/a	SHEET Sht-17 OF 17	

VECTORWORKS EDUCATIONAL VERSION